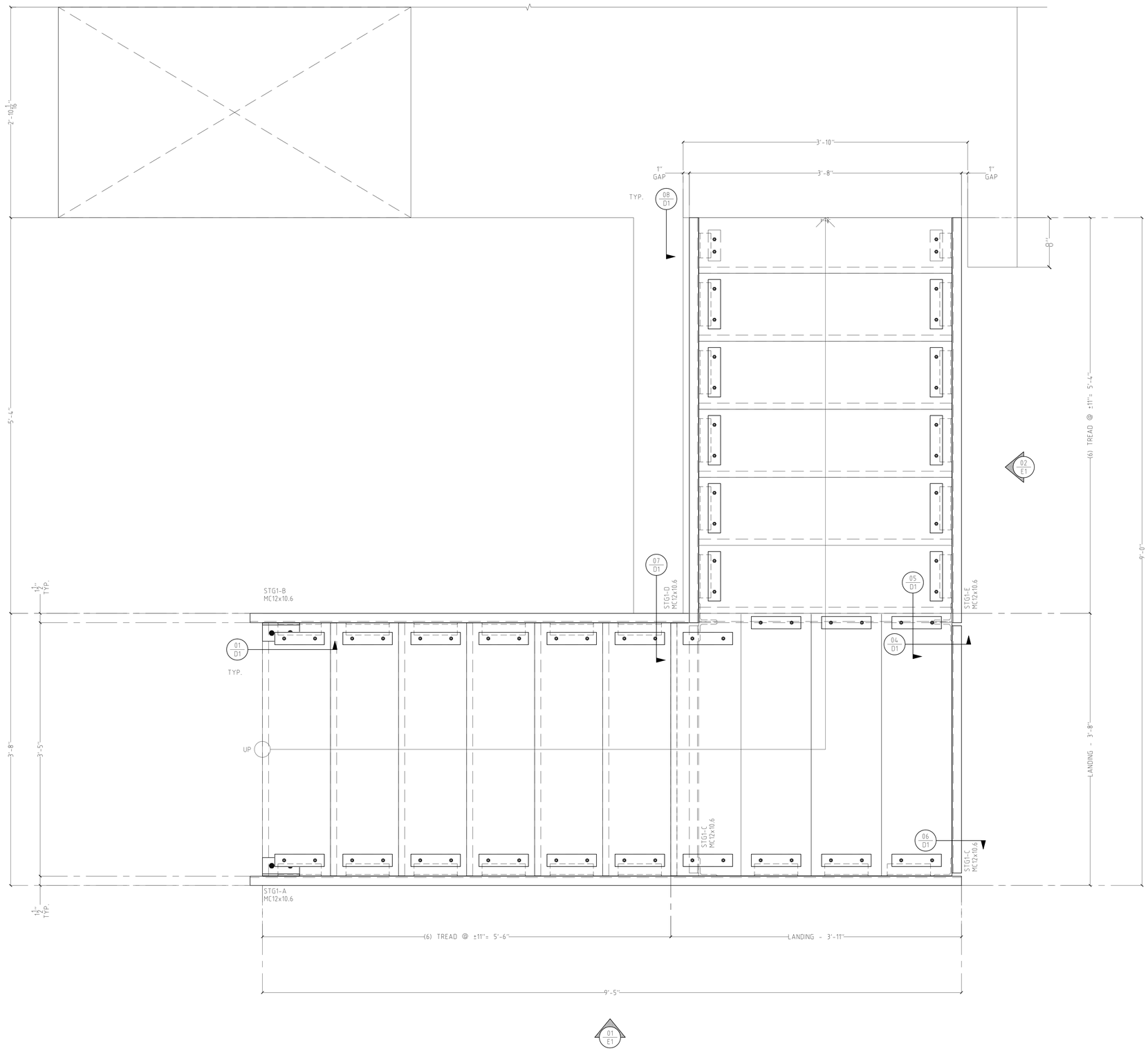

ISSUES DATE:

PREPARED BY:

AZI STEEL, INC
STRUCTURAL STEEL WROUGHT IRON.
19528 VENTURA BLVD # 243, TARZANA, CA 91356.

51 UNITS APARTMENT
3063 W.PICO BLVD LOS ANGELES, CA 90006

APPROVED BY: N/A

DRAWN BY: SL

CHECKED: ADRIAN

SCALE:

DATE: 05.14.2021

JOB# : 15-010

SHEET TITLE: LAYOUT PLAN VIEW

SHEET: L1

STAIR - PLAN VIEW

1-1/2" = 1'-0" 01

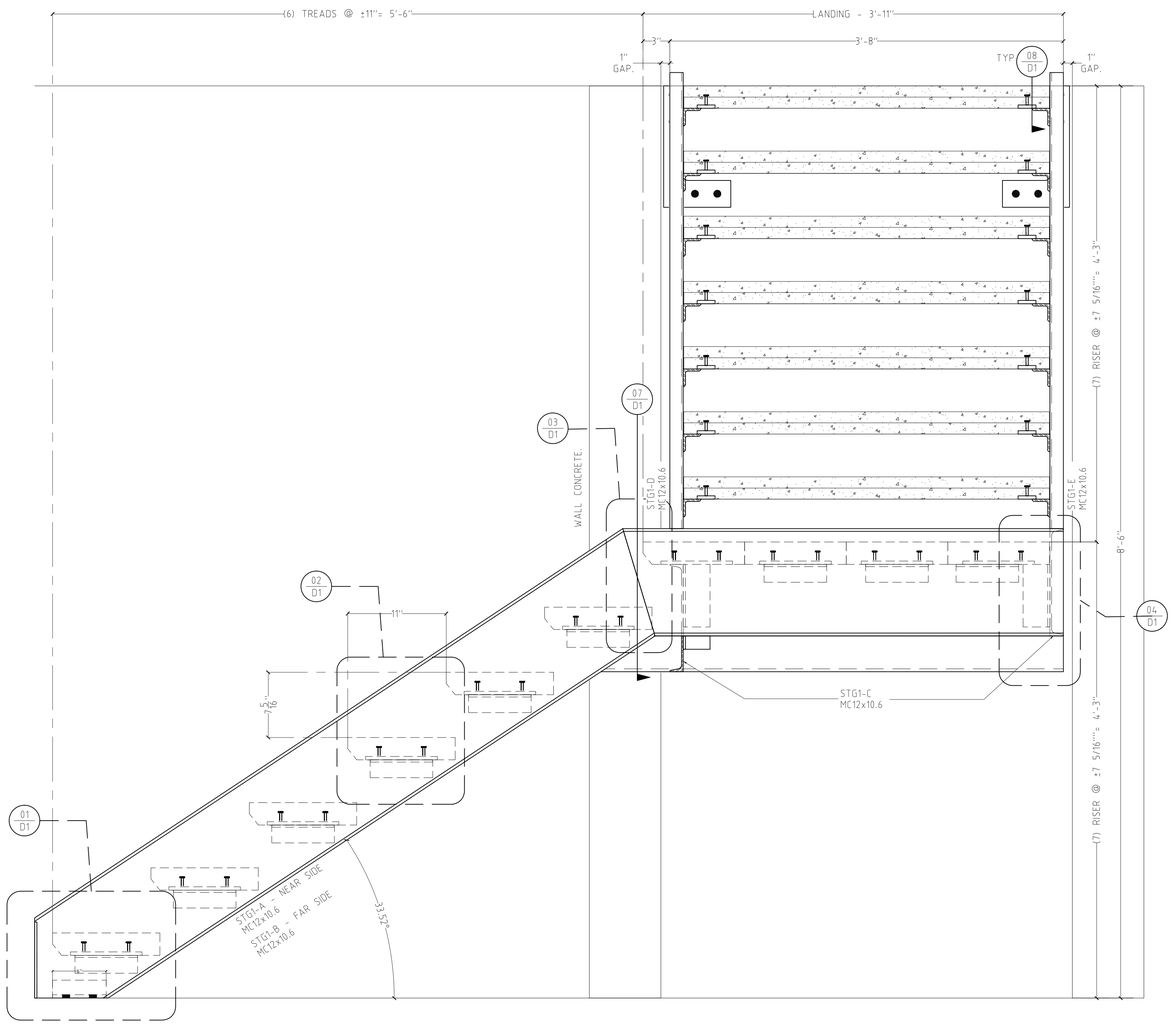

STAIR - ELEVATION 1-1/2" = 1'-0" 01

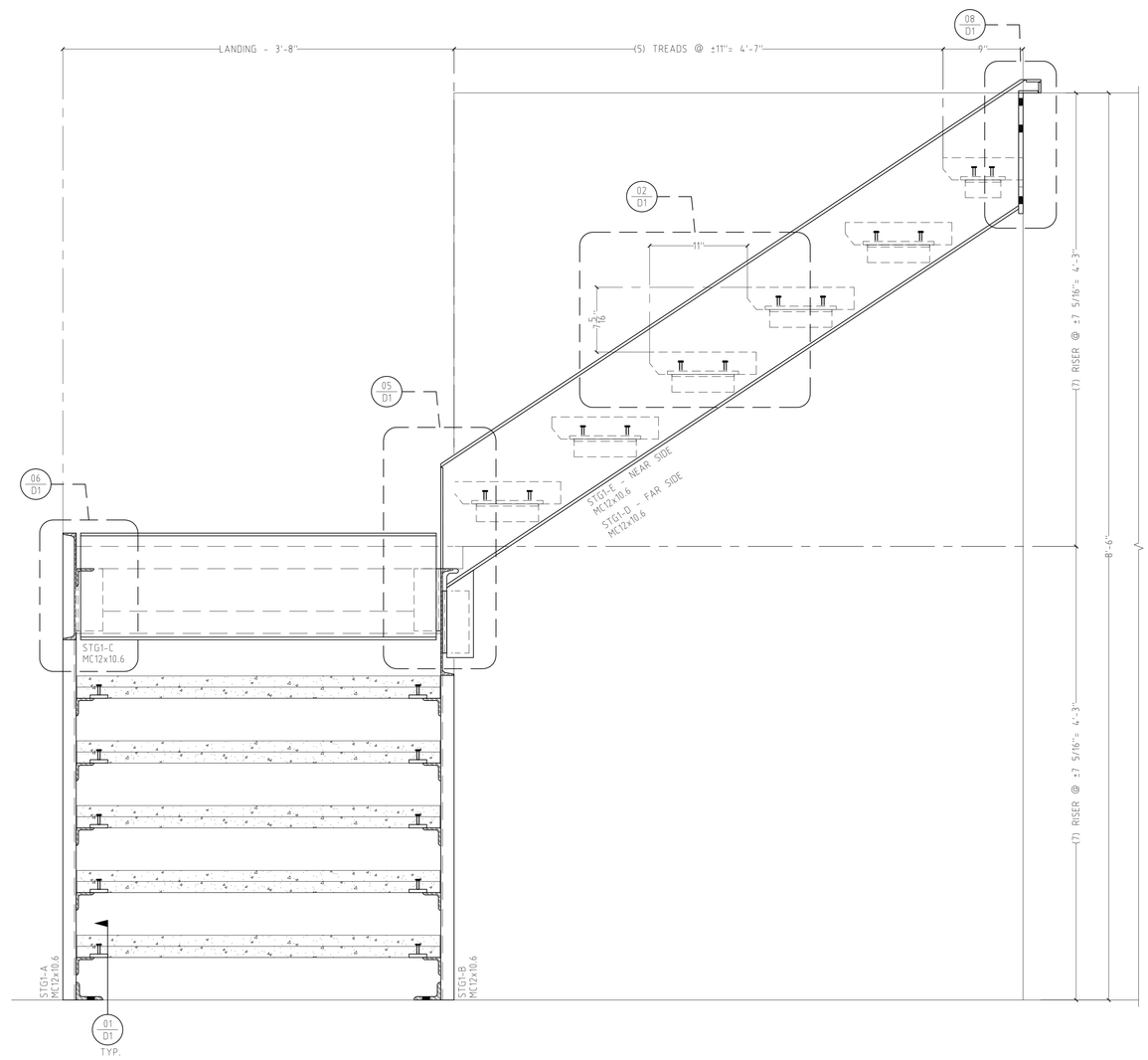

STAIR - ELEVATION 1-1/2" = 1'-0" 02

ISSUES DATE:

PREPARED BY:

AZI STEEL, INC
STRUCTURAL STEEL WROUGHT IRON.
19528 VENTURA BLVD # 243, TARZANA, CA 91356.

51 UNITS APARTMENT
3063 W.PICO BLVD LOS ANGELES, CA 90006

APPROVED BY: N/A

DRAWN BY: SL

CHECKED: ADRIAN

SCALE:

DATE: 05.14.2021

JOB# : 15-010

SHEET TITLE: ELEVATION

SHEET: E1

SEE DETAIL 02/D1 FOR TREAD DETAIL

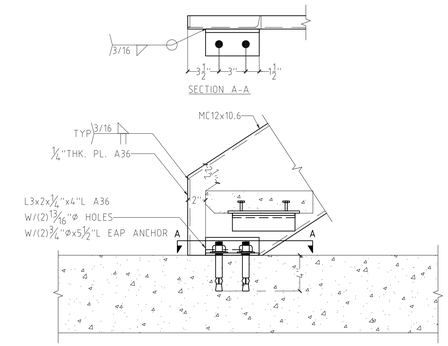

TYPICAL DETAIL 1-1/2" = 1'-0" 01

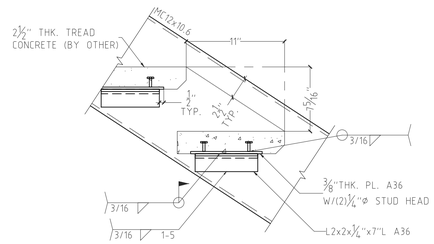

TYPICAL DETAIL 1-1/2" = 1'-0" 02

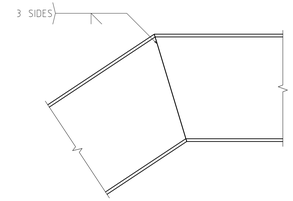

TYPICAL DETAIL 1-1/2" = 1'-0" 03

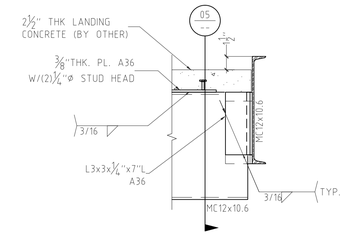

TYPICAL DETAIL 1-1/2" = 1'-0" 04

SEE DETAIL 02/D1 FOR TREAD DETAIL

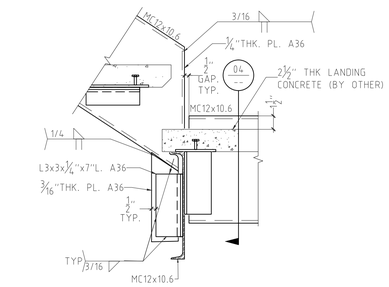

TYPICAL DETAIL 1-1/2" = 1'-0" 05

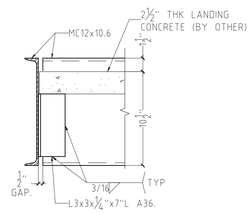

TYPICAL DETAIL 1-1/2" = 1'-0" 06

SEE DETAIL 02/D1 FOR TREAD DETAIL

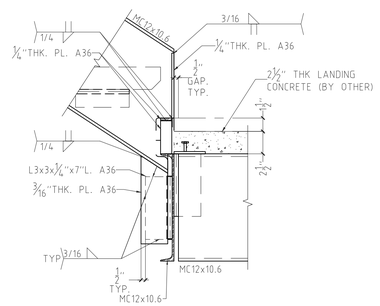

TYPICAL DETAIL 1-1/2" = 1'-0" 07

SEE DETAIL 02/D1 FOR TREAD DETAIL

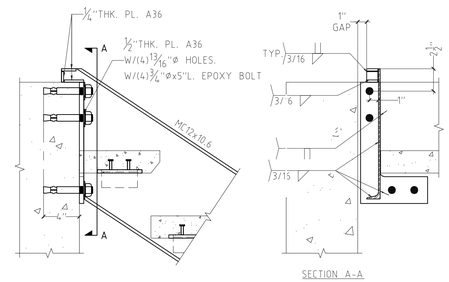

TYPICAL DETAIL 1-1/2" = 1'-0" 08

ISSUES DATE:

PREPARED BY:

AZI STEEL, INC
STRUCTURAL STEEL WROUGHT IRON.
19528 VENTURA BLVD # 243, TARZANA, CA 91356.

51 UNITS APARTMENT
3063 W.PICO BLVD LOS ANGELES, CA 90006

APPROVED BY: N/A

DRAWN BY: SL

CHECKED: ADRIAN

SCALE:

DATE: 05.14.2021

JOB# : 15-010

SHEET TITLE: TYPICAL DETAIL

SHEET: D1

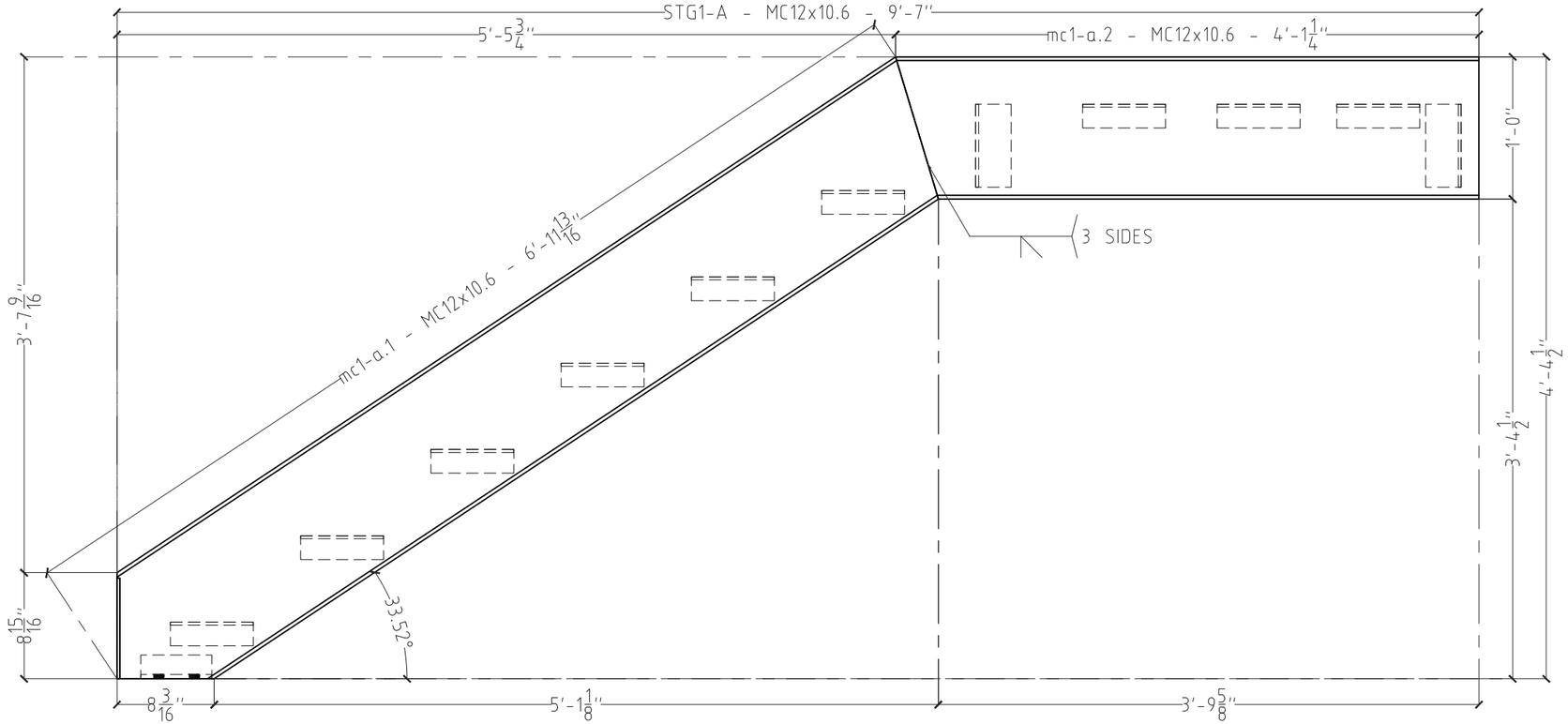

STRINGER DETAIL — 1" = 1'-0" — STG1-A

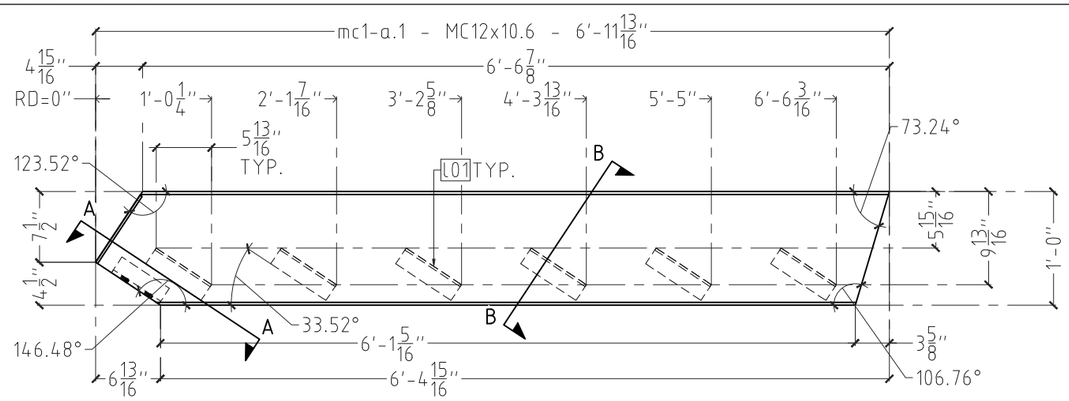

STRINGER DETAIL — 3/4" = 1'-0" — mc1-a.1

STG1-A - BILL OF MATERIAL - (1)REQ'D							
ASSEMBLY	P.MARK	PROFILE	LENGTH	QTY	ASTM	WEIGTH E.A.	TOTAL L.B.
STG1-A	mc1-a.1	MC12x10.6	6'-11 13/16"	1	A36	73.99	73.99
	mc1-a.2	MC12x10.6	4'-1 1/4"	1	A36	43.46	43.46
	L04	L3x2x3/8	0'-6"	1	A36	2.95	2.95
	L01	L2x2x1/4	0'-7"	9	A36	1.86	16.74
	L03	L3x3x1/4	0'-7"	2	A36	2.86	5.71
	p03	PL.1/4x0'-8 1/2"	0'-1 1/4"	1	A36	0.71	0.71
							143.57

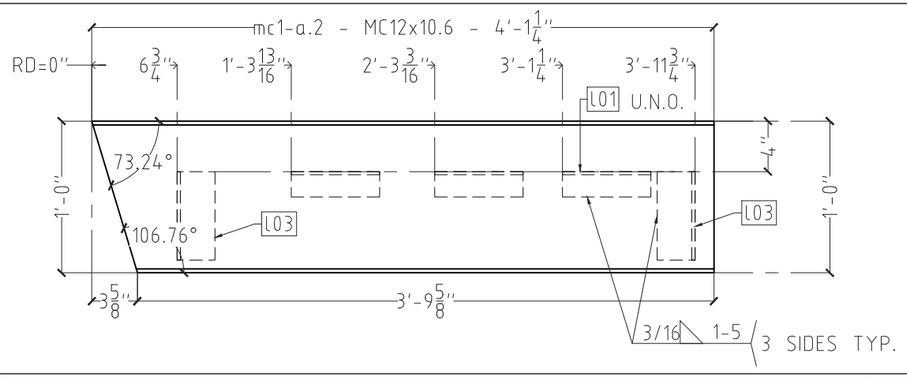

STRINGER DETAIL — 1" = 1'-0" — mc1-a.2

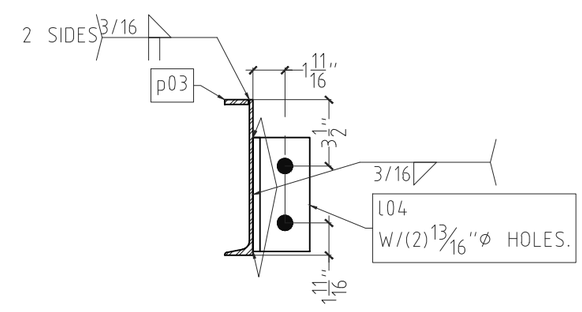

SECTION DETAIL — 1-1/2" = 1'-0" — A-A

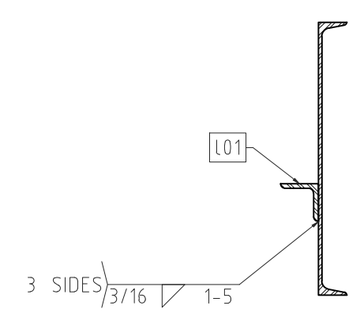

SECTION DETAIL — 1-1/2" = 1'-0" — B-B

ISSUES DATE:

PREPARED BY:

AZI STEEL, INC
STRUCTURAL STEEL WROUGHT IRON.
19528 VENTURA BLVD # 243, TARZANA, CA 91356.

51 UNITS APARTMENT
3063 W.PICO BLVD LOS ANGELES, CA 90006

APPROVED BY: N/A
DRAWN BY: SL
CHECKED: ADRIAN
SCALE:
DATE: 05.14.2021
JOB# : 15-010
SHEET TITLE: STRINGER DETAIL
SHEET: STG1-A

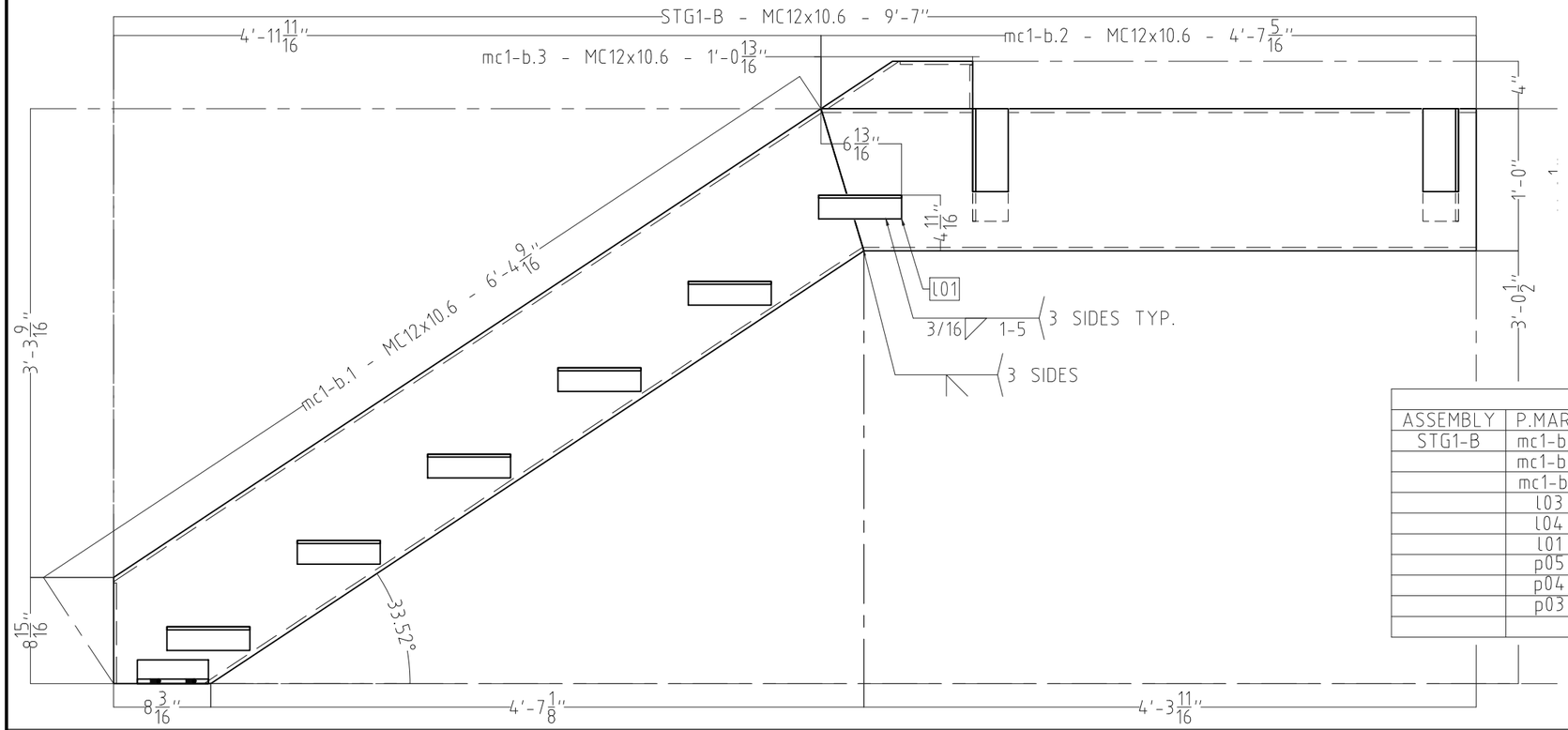

STG1-B - BILL OF MATERIAL - (1)REQ'D							
ASSEMBLY	P.MARK	PROFILE	LENGTH	QTY	ASTM	WEIGTH E.A.	TOTAL L.B.
STG1-B	mc1-b.3	MC12x10.6	1'-0 7/8"	1	A36	11.34	11.34
	mc1-b.2	MC12x10.6	4'-7 5/16"	1	A36	48.87	48.87
	mc1-b.1	MC12x10.6	6'-4 9/16"	1	A36	67.63	67.63
	L03	L3x3x1/4	0'-7"	4	A36	2.86	11.43
	L04	L3x2x3/8	0'-6"	1	A36	2.95	2.95
	L01	L2x2x1/4	0'-7"	6	A36	1.86	11.16
	p05	PL.1/4x0'-3 11/16"	0'-1 1/4"	1	A36	0.31	0.31
	p04	PL.1/4x0'-6 1/8"	0'-1 1/4"	1	A36	0.51	0.51
	p03	PL.1/4x0'-8 1/2"	0'-1 1/4"	1	A36	0.71	0.71
							154.91

STRINGER DETAIL 1" = 1'-0" STG1-B

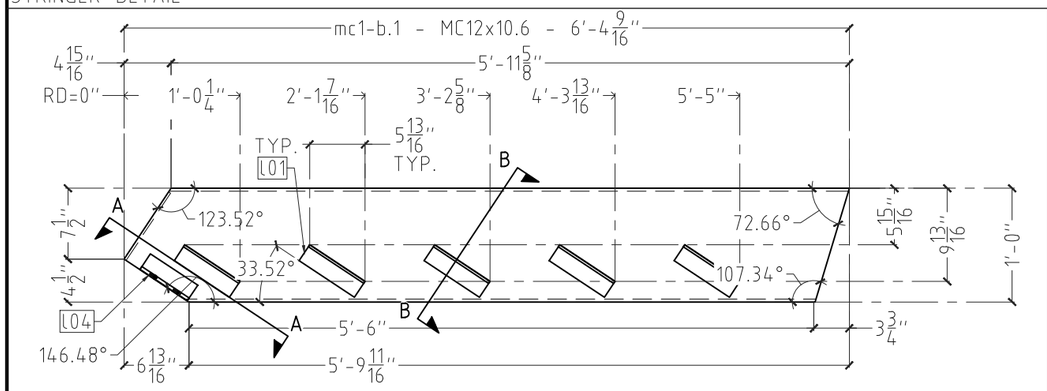

STRINGER DETAIL 3/4" = 1'-0" mc1-b.1

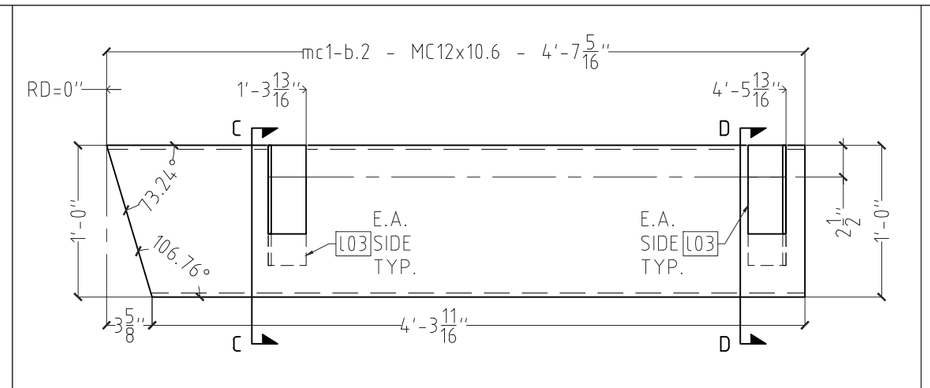

STRINGER DETAIL 1" = 1'-0" mc1-b.2

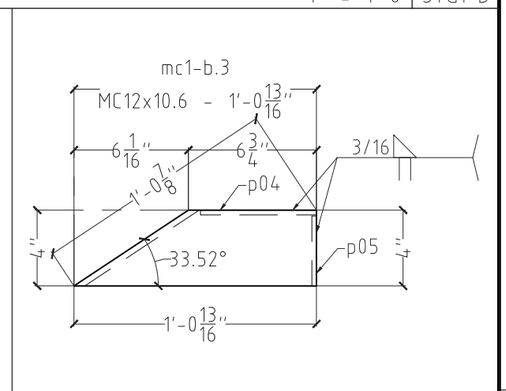

STRINGER DETAIL 1-1/2" = 1'-0" mc1-b.3

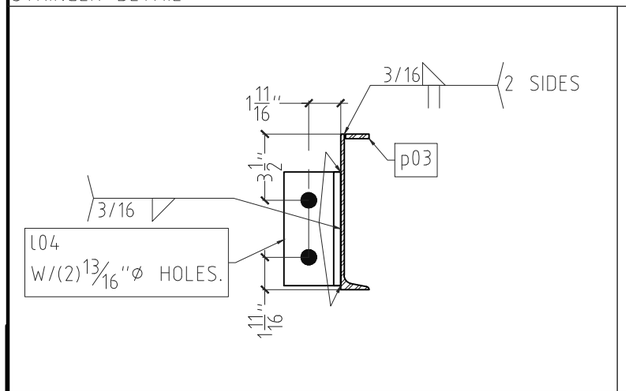

SECTION DETAIL 1-1/2" = 1'-0" A-A

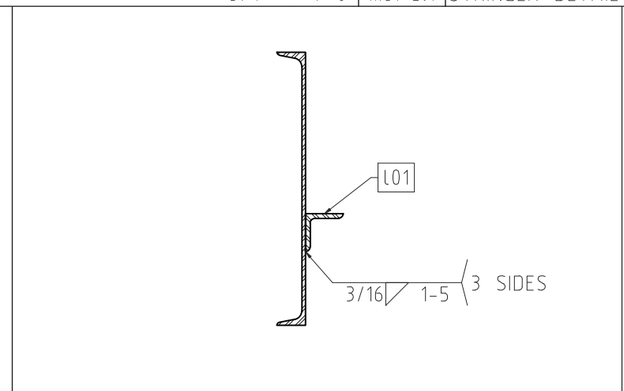

SECTION DETAIL 1-1/2" = 1'-0" B-B

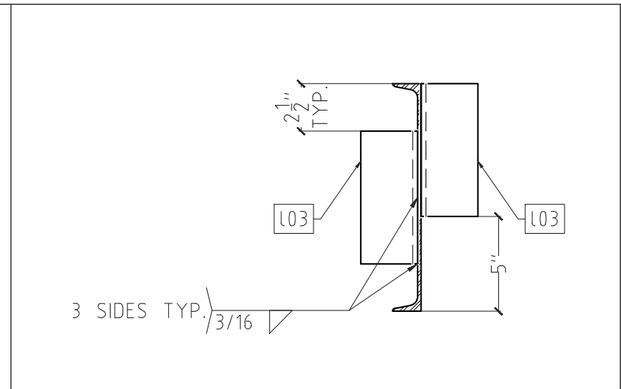

SECTION DETAIL 1-1/2" = 1'-0" C-C

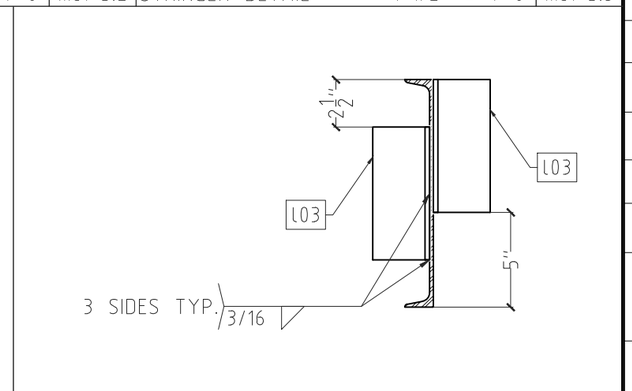

DETAIL 1-1/2" = 1'-0" 01

ISSUES DATE:

PREPARED BY:

AZI STEEL, INC
STRUCTURAL STEEL WROUGHT IRON.
19528 VENTURA BLVD # 243, TARZANA, CA 91356.

51 UNITS APARTMENT
3063 W.PICO BLVD LOS ANGELES, CA 90006

APPROVED BY: N/A
DRAWN BY: SL
CHECKED: ADRIAN
SCALE:
DATE: 05.14.2021
JOB# : 15-010
SHEET TITLE: STRINGER DETAIL
SHEET: STG1-B

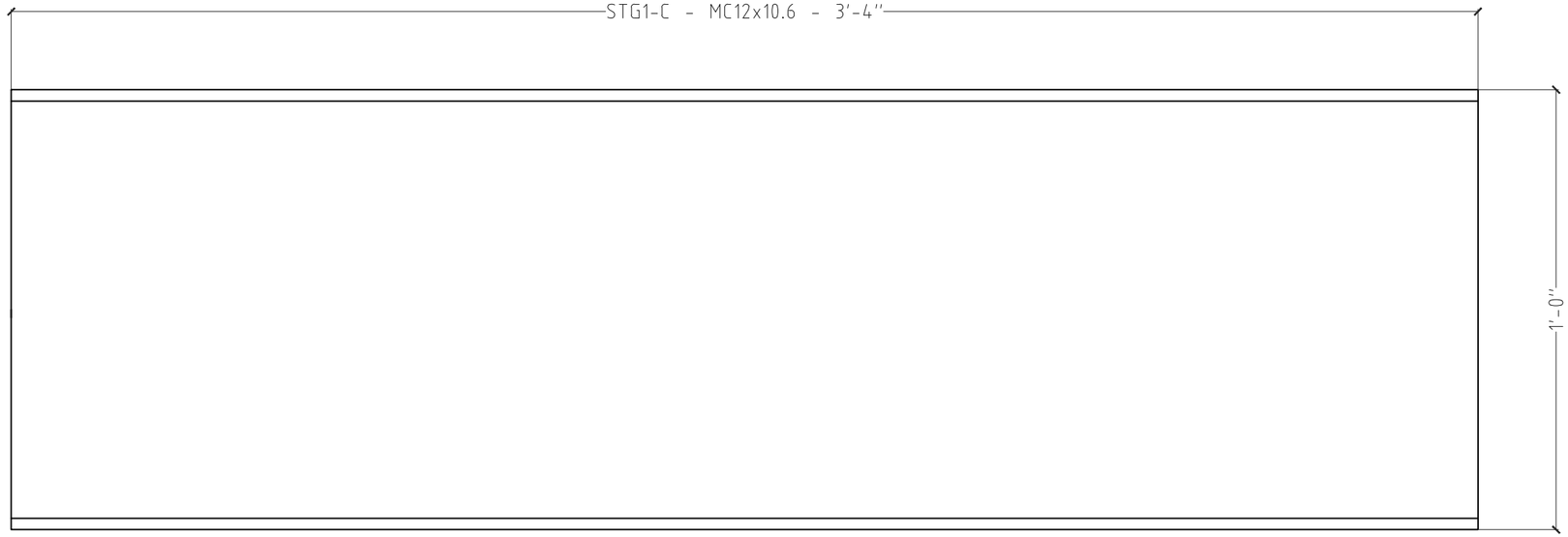

STRINGER DETAIL

3" = 1'-0" | STG1-C

STG1-C - BILL OF MATERIAL - (2)REQ'D							
ASSEMBLY	P.MARK	PROFILE	LENGTH	QTY	ASTM	WEIGTH E.A.	TOTAL L.B.
STG1-C	mc1-c.1	MC12x10.6	3'-4"	1	A36	35.32	35.32
							35.32

ISSUES DATE:

PREPARED BY:

AZI STEEL, INC
STRUCTURAL STEEL WROUGHT IRON.
19528 VENTURA BLVD # 243, TARZANA, CA 91356.

51 UNITS APARTMENT

3063 W.PICO BLVD LOS ANGELES, CA 90006

APPROVED BY: N/A

DRAWN BY: SL

CHECKED: ADRIAN

SCALE:

DATE: 05.14.2021

JOB# : 15-010

SHEET TITLE: STRINGER DETAIL

SHEET: STG1-C

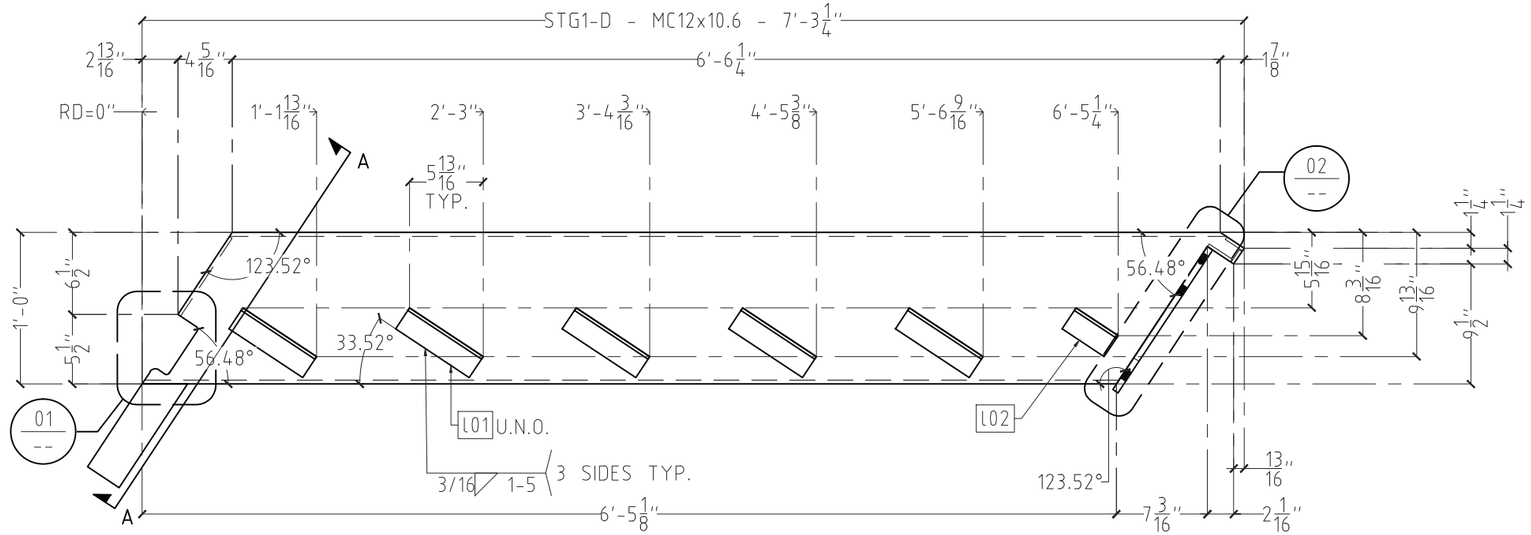

STRINGER DETAIL 1" = 1'-0" STG1-D

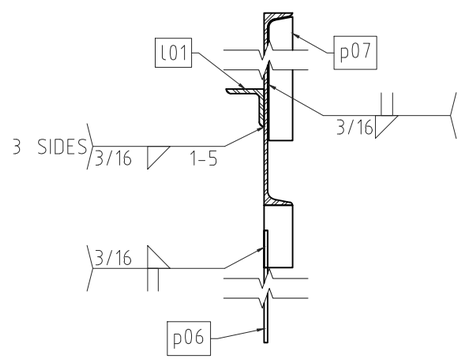

SECTION DETAIL 1-1/2" = 1'-0" A-A

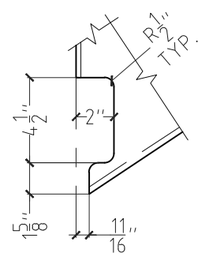

DETAIL 1-1/2" = 1'-0" 01

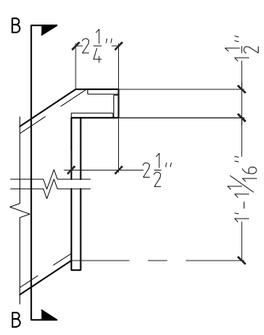

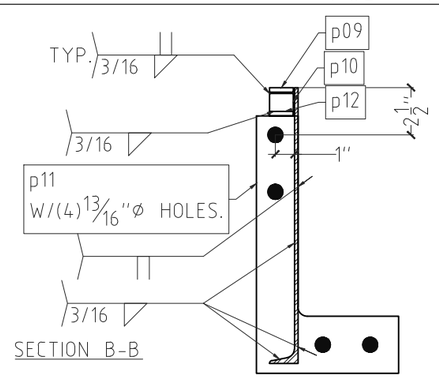

DETAIL 1-1/2" = 1'-0" 02

STG1-D - BILL OF MATERIAL - (1)REQ'D							
ASSEMBLY	P.MARK	PROFILE	LENGTH	QTY	ASTM	WEIGTH E.A.	TOTAL L.B.
STG1-D	mc1-d.1	MC12x10.6	7'-3 1/4"	1	A36	77.06	77.06
	L02	L2x2x1/4	0'-4"	1	A36	1.06	1.06
	L01	L2x2x1/4	0'-7"	5	A36	1.86	9.30
	p10	PL.1/4x0'-1 3/16"	0'-1 1/4"	1	A36	0.10	0.10
	p11	PL.1/2x1'-1 9/16"	0'-7 1/2"	1	A36	14.50	14.50
	p12	PL.1/4x0'-2 3/16"	0'-1 1/4"	1	A36	0.20	0.20
	p06	PL.3/16x0'-9 13/16"	0'-3"	1	A36	1.53	1.53
	p07	PL.1/4x0'-7 3/8"	0'-1 1/4"	1	A36	0.61	0.61
	p09	PL.1/4x0'-1 5/8"	0'-1 1/4"	1	A36	0.10	0.10
							104.48

ISSUES DATE:

PREPARED BY:

AZI STEEL, INC
STRUCTURAL STEEL WROUGHT IRON.
19528 VENTURA BLVD # 243, TARZANA, CA 91356.

51 UNITS APARTMENT
3063 W.PICO BLVD LOS ANGELES, CA 90006

APPROVED BY: N/A
DRAWN BY: SL
CHECKED: ADRIAN
SCALE:
DATE: 05.14.2021
JOB# : 15-010
SHEET TITLE: STRINGER DETAIL
SHEET: STG1-D

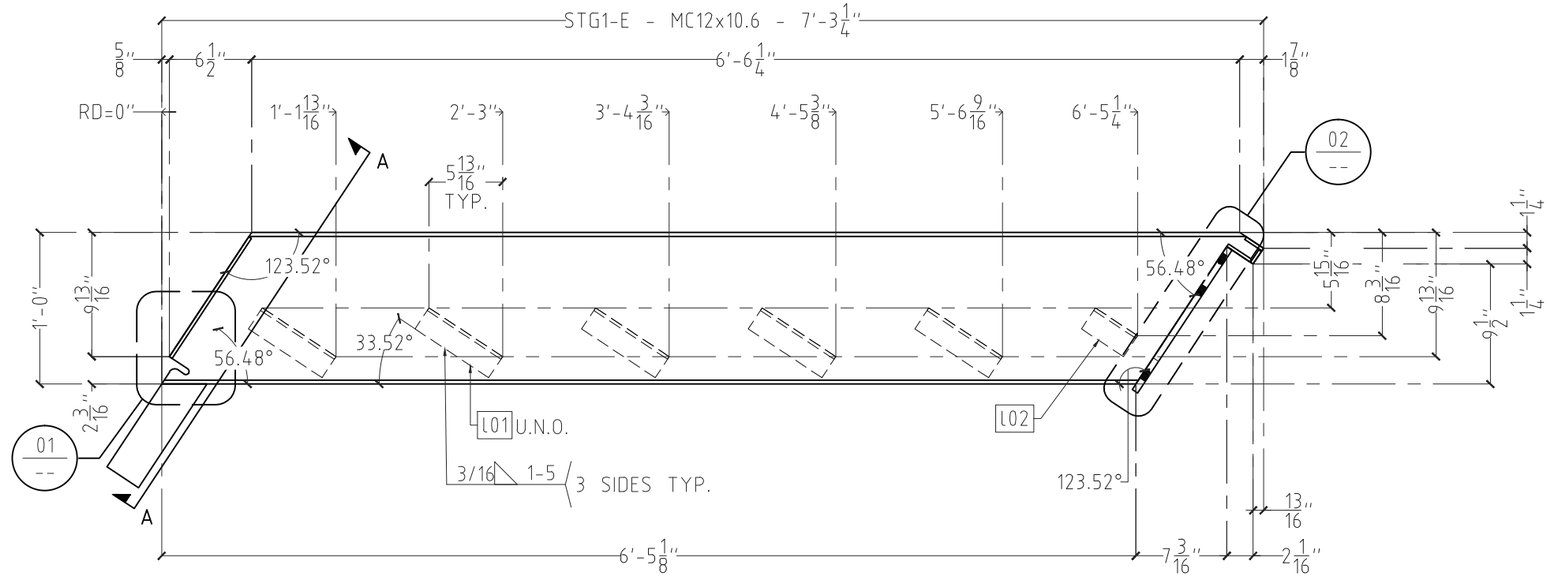

STRINGER DETAIL 1" = 1'-0" STG1-E

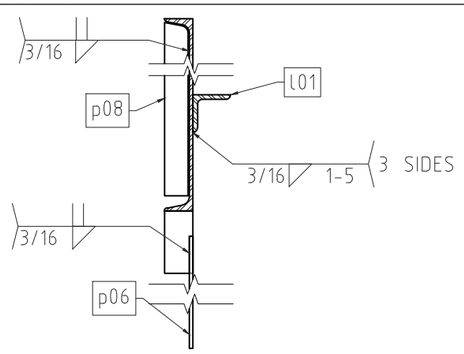

SECTION DETAIL 1-1/2" = 1'-0" A-A

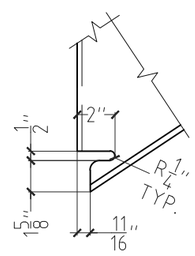

DETAIL 1-1/2" = 1'-0" 01

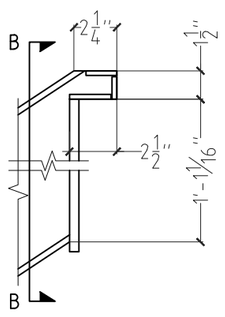

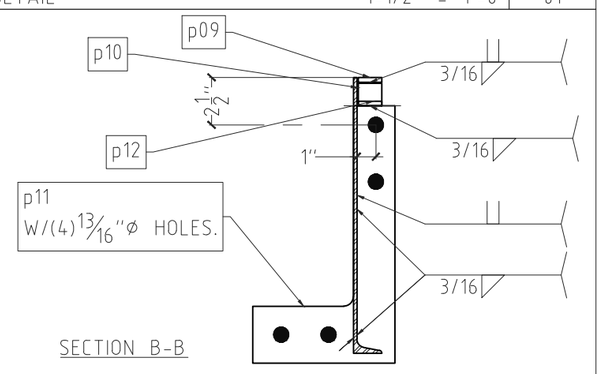

DETAIL 1-1/2" = 1'-0" 02

STG1-E - BILL OF MATERIAL - (1)REQ'D							
ASSEMBLY	P.MARK	PROFILE	LENGTH	QTY	ASTM	WEIGTH E.A.	TOTAL L.B.
STG1-E	mc1-e.1	MC12x10.6	7'-3 1/4"	1	A36	77.06	77.06
	L02	L2x2x1/4	0'-4"	1	A36	1.06	1.06
	L01	L2x2x1/4	0'-7"	5	A36	1.86	9.30
	p10	PL.1/4x0'-1 3/16"	0'-1 1/4"	1	A36	0.10	0.10
	p11	PL.1/2x1'-1 9/16"	0'-7 1/2"	1	A36	14.50	14.50
	p12	PL.1/4x0'-2 3/16"	0'-1 1/4"	1	A36	0.20	0.20
	p06	PL.3/16x0'-9 13/16"	0'-3"	1	A36	1.53	1.53
	p08	PL.1/4x0'-11 3/8"	0'-1 1/4"	1	A36	1.02	1.02
	p09	PL.1/4x0'-1 5/8"	0'-1 1/4"	1	A36	0.10	0.10
							104.89

ISSUES DATE:

PREPARED BY:

AZI STEEL, INC
STRUCTURAL STEEL WROUGHT IRON.
19528 VENTURA BLVD # 243, TARZANA, CA 91356.

51 UNITS APARTMENT
3063 W.PICO BLVD LOS ANGELES, CA 90006

APPROVED BY: N/A
DRAWN BY: SL
CHECKED: ADRIAN
SCALE:
DATE: 05.14.2021
JOB# : 15-010
SHEET TITLE: STRINGER DETAIL
SHEET: STG1-E

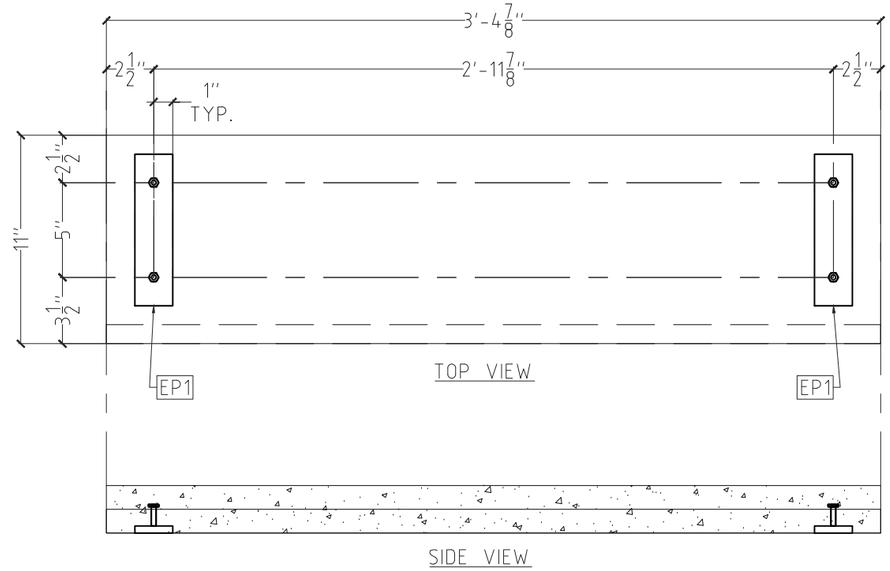

TREAD PRECAST DETAIL 1-1/2" = 1'-0" T1

T1 - BILL OF MATERIAL - (11)REQ'D							
ASSEMBLY	P.MARK	PROFILE	LENGTH	QTY	ASTM	WEIGTH E.A.	TOTAL L.B.
EP1	---	SEE SHEET SUB ASSEMBLY	---	2	--	3.48	6.96
							6.96

ISSUES DATE:

PREPARED BY:

AZI STEEL, INC
STRUCTURAL STEEL WROUGHT IRON.
19528 VENTURA BLVD # 243, TARZANA, CA 91356.

51 UNITS APARTMENT

3063 W.PICO BLVD LOS ANGELES, CA 90006

APPROVED BY: N/A

DRAWN BY: SL

CHECKED: ADRIAN

SCALE:

DATE: 05.14.2021

JOB# : 15-010

SHEET TITLE: TREAD PRECAST DETAIL

SHEET: T1

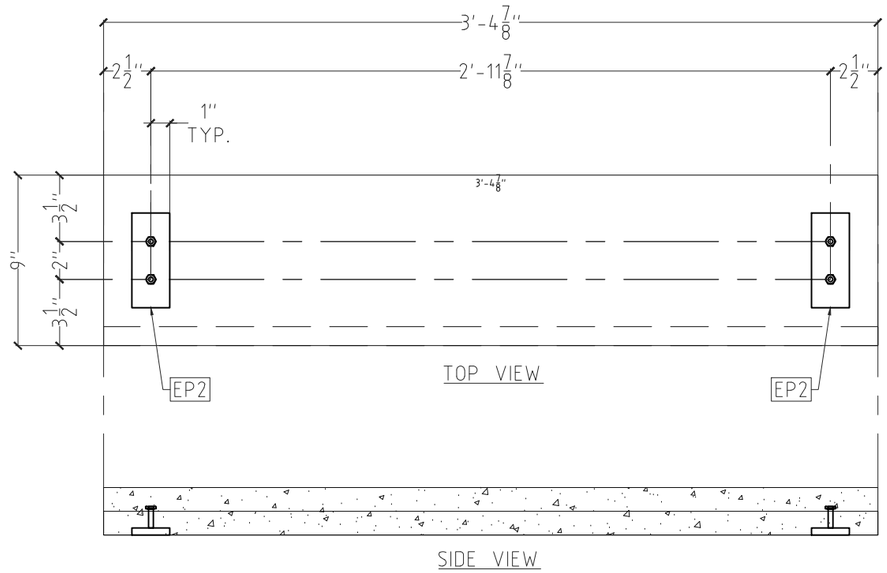

TREAD PRECAST DETAIL 1-1/2" = 1'-0" T2

T2 - BILL OF MATERIAL - (1)REQ'D							
ASSEMBLY	P.MARK	PROFILE	LENGTH	QTY	ASTM	WEIGTH E.A.	TOTAL L.B.
EP2	---	SEE SHEET SUB ASSEMBLY	---	2	--	1.13	2.26
							2.26

ISSUES DATE:

PREPARED BY:

AZI STEEL, INC
STRUCTURAL STEEL WROUGHT IRON.
19528 VENTURA BLVD # 243, TARZANA, CA 91356.

51 UNITS APARTMENT
3063 W.PICO BLVD LOS ANGELES, CA 90006

APPROVED BY: N/A

DRAWN BY: SL

CHECKED: ADRIAN

SCALE:

DATE: 05.14.2021

JOB# : 15-010

SHEET TITLE: TREAD PRECAST DETAIL

SHEET: T2

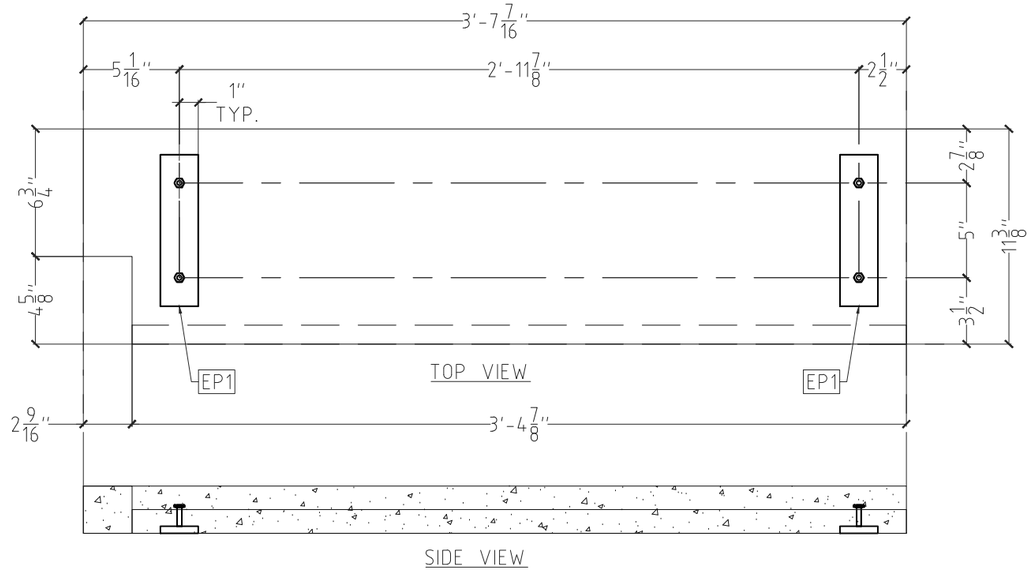

LANDING PRECAST DETAIL 1-1/2" = 1'-0" LD1

LD1 - BILL OF MATERIAL - (1)REQ'D							
ASSEMBLY	P.MARK	PROFILE	LENGTH	QTY	ASTM	WEIGTH E.A.	TOTAL L.B.
EP1	---	SEE SHEET SUB ASSEMBLY	---	2	--	3.48	6.96
							6.96

ISSUES DATE:

PREPARED BY:

AZI STEEL, INC
STRUCTURAL STEEL WROUGHT IRON.
19528 VENTURA BLVD # 243, TARZANA, CA 91356.

51 UNITS APARTMENT
3063 W.PICO BLVD LOS ANGELES, CA 90006

APPROVED BY: N/A

DRAWN BY: SL

CHECKED: ADRIAN

SCALE:

DATE: 05.14.2021

JOB# : 15-010

SHEET TITLE: LANDING PRECAST DETAIL

SHEET: LD1

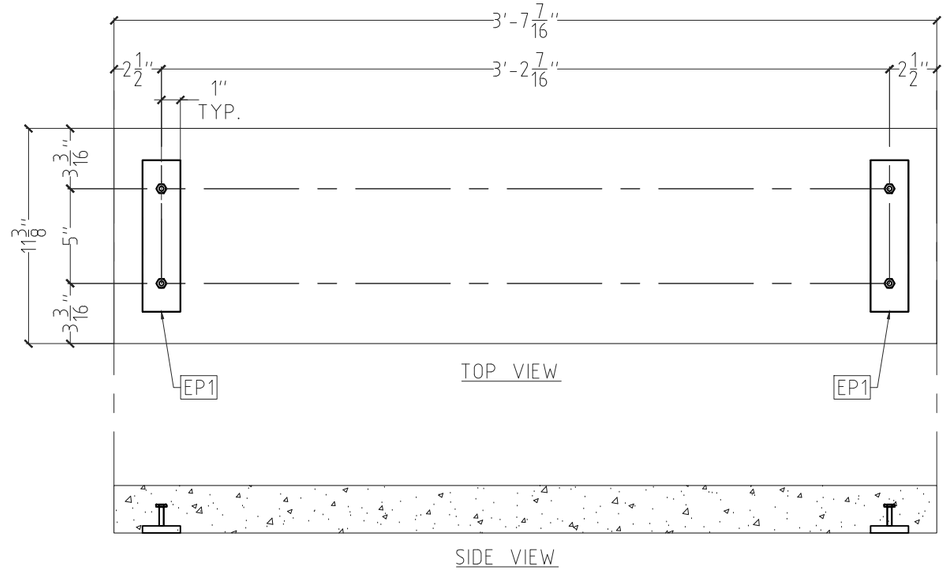

LANDING PRECAST DETAIL 1-1/2" = 1'-0" LD2

LD2 - BILL OF MATERIAL - (3)REQ'D							
ASSEMBLY	P.MARK	PROFILE	LENGTH	QTY	ASTM	WEIGTH E.A.	TOTAL L.B.
EP1	---	SEE SHEET SUB ASSEMBLY	---	2	--	3.48	6.96
							6.96

ISSUES DATE:

PREPARED BY:

AZI STEEL, INC
STRUCTURAL STEEL WROUGHT IRON.
19528 VENTURA BLVD # 243, TARZANA, CA 91356.

51 UNITS APARTMENT

3063 W.PICO BLVD LOS ANGELES, CA 90006

APPROVED BY: N/A

DRAWN BY: SL

CHECKED: ADRIAN

SCALE:

DATE: 05.14.2021

JOB# : 15-010

SHEET TITLE: LANDING PRECAST DETAIL

SHEET: LD2

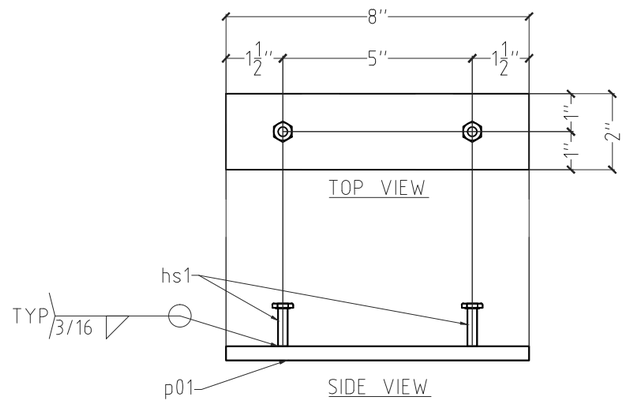

EMBED PLATE DETAIL 3" = 1'-0" EP1

EP1 - BILL OF MATERIAL - (32)REQ'D						
P.MARK	PROFILE	LENGTH	QTY	ASTM	WEIGTH E.A.	TOTAL L.B.
p01	PL.3/8x0'-8"	0'-2"	2	A36	1.69	3.37
hs1	1/4"Ø HEAD BOLT	0'-1"	4	A108	0.03	0.11
						3.48

ISSUES DATE:

PREPARED BY:

AZI STEEL, INC
STRUCTURAL STEEL WROUGHT IRON.
19528 VENTURA BLVD # 243, TARZANA, CA 91356.

51 UNITS APARTMENT

3063 W.PICO BLVD LOS ANGELES, CA 90006

APPROVED BY: N/A

DRAWN BY: SL

CHECKED: ADRIAN

SCALE:

DATE: 05.14.2021

JOB# : 15-010

SHEET TITLE: EMBED PLATE

SHEET: EP1

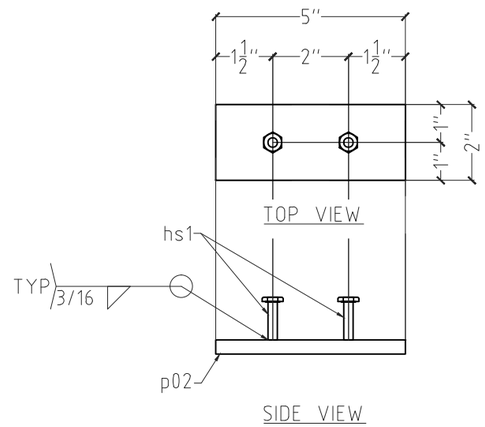

EMBED PLATE DETAIL 3" = 1'-0" EP2

EP2 - BILL OF MATERIAL - (2)REQ'D						
P.MARK	PROFILE	LENGTH	QTY	ASTM	WEIGTH E.A.	TOTAL L.B.
p02	PL.3/8x0'-5"	0'-2"	1	A36	1.07	1.07
hs1	1/4"Ø HEAD BOLT	0'-1"	2	A108	0.03	0.05
						1.13

ISSUES DATE:

PREPARED BY:

AZI STEEL, INC
STRUCTURAL STEEL WROUGHT IRON.
19528 VENTURA BLVD # 243, TARZANA, CA 91356.

51 UNITS APARTMENT

3063 W.PICO BLVD LOS ANGELES, CA 90006

APPROVED BY: N/A

DRAWN BY: SL

CHECKED: ADRIAN

SCALE:

DATE: 05.14.2021

JOB# : 15-010

SHEET TITLE: EMBED PLATE

SHEET: EP2

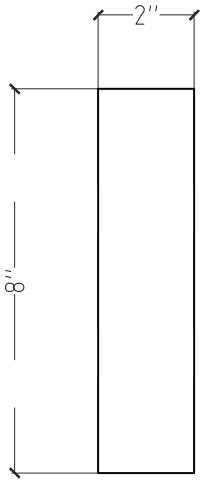

p01 - (30)REQ'D
3/8"THK. PL. A36.

ISSUES DATE:

PREPARED BY:

AZI STEEL, INC
STRUCTURAL STEEL WROUGHT IRON.
19528 VENTURA BLVD # 243, TARZANA, CA 91356.

51 UNITS APARTMENT
3063 W.PICO BLVD LOS ANGELES, CA 90006

APPROVED BY: N/A

DRAWN BY: SL

CHECKED: ADRIAN

SCALE: 3" = 1'-0"

DATE: 05.14.2021

JOB# : 15-010

SHEET TITLE: PLATE DETAIL

SHEET: P01

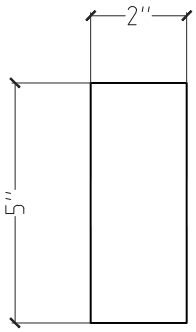

p02 - (2)REQ'D
3/8"THK. PL. A36.

ISSUES DATE:

PREPARED BY:

AZI STEEL, INC
STRUCTURAL STEEL WROUGHT IRON.
19528 VENTURA BLVD # 243, TARZANA, CA 91356.

51 UNITS APARTMENT
3063 W.PICO BLVD LOS ANGELES, CA 90006

APPROVED BY: N/A

DRAWN BY: SL

CHECKED: ADRIAN

SCALE: 3" = 1'-0"

DATE: 05.14.2021

JOB# : 15-010

SHEET TITLE: PLATE DETAIL

SHEET: P02

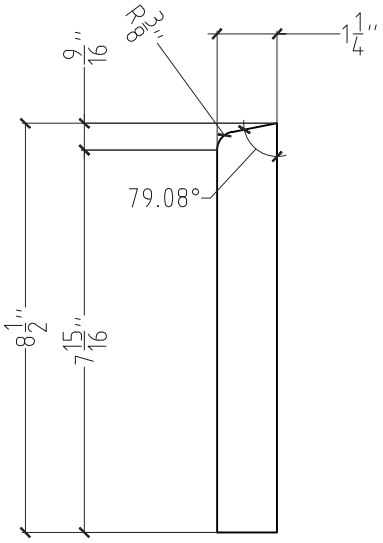

p03 - (2)REQ'D
1/4"THK. PL. A36.

ISSUES DATE:

PREPARED BY:

AZI STEEL, INC
STRUCTURAL STEEL WROUGHT IRON.
19528 VENTURA BLVD # 243, TARZANA, CA 91356.

51 UNITS APARTMENT
3063 W.PICO BLVD LOS ANGELES, CA 90006

APPROVED BY: N/A

DRAWN BY: SL

CHECKED: ADRIAN

SCALE: 3" = 1'-0"

DATE: 05.14.2021

JOB# : 15-010

SHEET TITLE: PLATE DETAIL

SHEET: P03

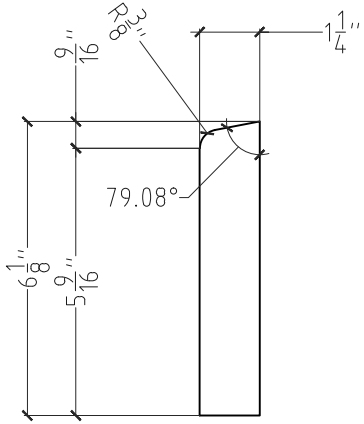

p04 - (1)REQ'D
1/4"THK. PL. A36.

ISSUES DATE:

PREPARED BY:

AZI STEEL, INC
STRUCTURAL STEEL WROUGHT IRON.
19528 VENTURA BLVD # 243, TARZANA, CA 91356.

51 UNITS APARTMENT

3063 W.PICO BLVD LOS ANGELES, CA 90006

APPROVED BY: N/A

DRAWN BY: SL

CHECKED: ADRIAN

SCALE: 3" = 1'-0"

DATE: 05.14.2021

JOB# : 15-010

SHEET TITLE: PLATE DETAIL

SHEET: P04

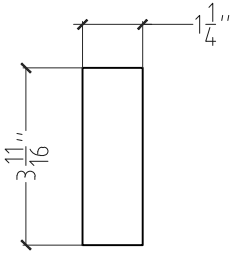

p05 - (1)REQ'D
1/4"THK. PL. A36.

ISSUES DATE:

PREPARED BY:

AZI STEEL, INC
STRUCTURAL STEEL WROUGHT IRON.
19528 VENTURA BLVD # 243, TARZANA, CA 91356.

51 UNITS APARTMENT

3063 W.PICO BLVD LOS ANGELES, CA 90006

APPROVED BY: N/A

DRAWN BY: SL

CHECKED: ADRIAN

SCALE: 3" = 1'-0"

DATE: 05.14.2021

JOB# : 15-010

SHEET TITLE: PLATE DETAIL

SHEET: P05

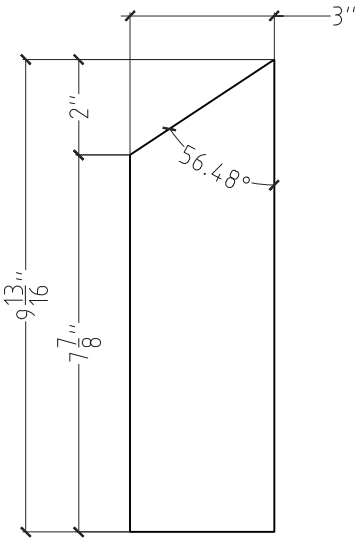

p06 - (2)REQ'D
3/16"THK. PL. A36.

ISSUES DATE:

PREPARED BY:

AZI STEEL, INC
STRUCTURAL STEEL WROUGHT IRON.
19528 VENTURA BLVD # 243, TARZANA, CA 91356.

51 UNITS APARTMENT

3063 W.PICO BLVD LOS ANGELES, CA 90006

APPROVED BY: N/A

DRAWN BY: SL

CHECKED: ADRIAN

SCALE: 3" = 1'-0"

DATE: 05.14.2021

JOB# : 15-010

SHEET TITLE: PLATE DETAIL

SHEET: P06

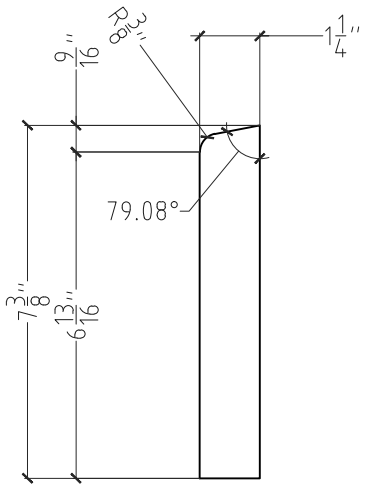

p07 - (1)REQ'D
1/4"THK. PL. A36.

ISSUES DATE:

PREPARED BY:

AZI STEEL, INC
STRUCTURAL STEEL WROUGHT IRON.
19528 VENTURA BLVD # 243, TARZANA, CA 91356.

51 UNITS APARTMENT
3063 W.PICO BLVD LOS ANGELES, CA 90006

APPROVED BY: N/A
DRAWN BY: SL
CHECKED: ADRIAN
SCALE: 3" = 1'-0"
DATE: 05.14.2021
JOB# : 15-010
SHEET TITLE: PLATE DETAIL
SHEET: P07

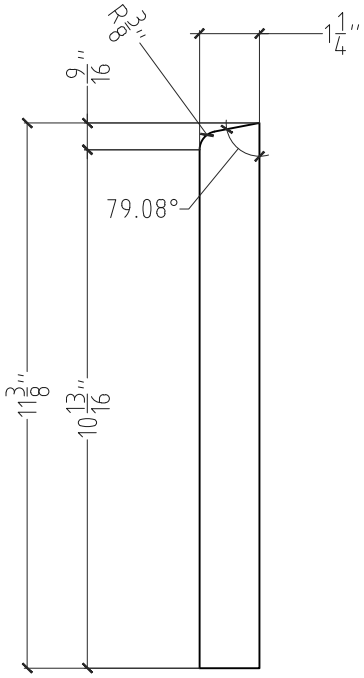

p08 - (1)REQ'D
1/4"THK. PL. A36.

ISSUES DATE:

PREPARED BY:

AZI STEEL, INC
STRUCTURAL STEEL WROUGHT IRON.
19528 VENTURA BLVD # 243, TARZANA, CA 91356.

51 UNITS APARTMENT
3063 W.PICO BLVD LOS ANGELES, CA 90006

APPROVED BY: N/A
DRAWN BY: SL
CHECKED: ADRIAN
SCALE: 3" = 1'-0"
DATE: 05.14.2021
JOB# : 15-010
SHEET TITLE: PLATE DETAIL
SHEET: P08

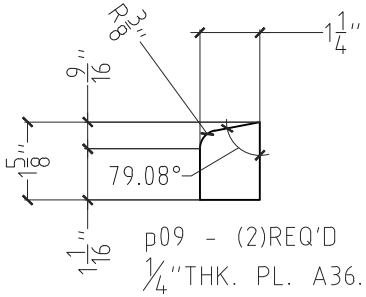

P09 - (2)REQ'D
1/4"THK. PL. A36.

ISSUES DATE:

PREPARED BY:

AZI STEEL, INC
STRUCTURAL STEEL WROUGHT IRON.
19528 VENTURA BLVD # 243, TARZANA, CA 91356.

51 UNITS APARTMENT

3063 W.PICO BLVD LOS ANGELES, CA 90006

APPROVED BY: N/A

DRAWN BY: SL

CHECKED: ADRIAN

SCALE: 3" = 1'-0"

DATE: 05.14.2021

JOB# : 15-010

SHEET TITLE: PLATE DETAIL

SHEET: P09

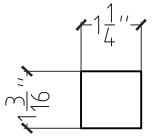

p10 - (2)REQ'D
1/4"THK. PL. A36.

ISSUES DATE:

PREPARED BY:

AZI STEEL, INC
STRUCTURAL STEEL WROUGHT IRON.
19528 VENTURA BLVD # 243, TARZANA, CA 91356.

51 UNITS APARTMENT

3063 W.PICO BLVD LOS ANGELES, CA 90006

APPROVED BY: N/A

DRAWN BY: SL

CHECKED: ADRIAN

SCALE: 3" = 1'-0"

DATE: 05.14.2021

JOB# : 15-010

SHEET TITLE: PLATE DETAIL

SHEET: P10

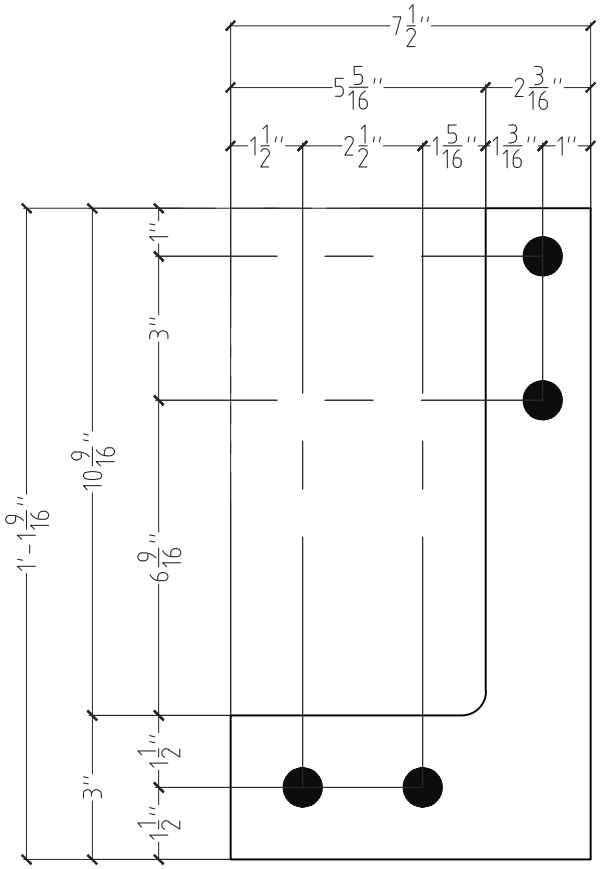

p11 - ()REQ'D
1/2"THK. PL. A36.
W/(4)13/16"Ø HOLES.

ISSUES DATE:

PREPARED BY:

AZI STEEL, INC
STRUCTURAL STEEL WROUGHT IRON.
19528 VENTURA BLVD # 243, TARZANA, CA 91356.

51 UNITS APARTMENT

3063 W.PICO BLVD LOS ANGELES, CA 90006

APPROVED BY: N/A

DRAWN BY: SL

CHECKED: ADRIAN

SCALE: 3" = 1'-0"

DATE: 05.14.2021

JOB# : 15-010

SHEET TITLE: PLATE DETAIL

SHEET: P11

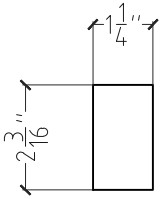

p12 - (2)REQ'D
1/2"THK. PL. A36.

ISSUES DATE:

PREPARED BY:

AZI STEEL, INC
STRUCTURAL STEEL WROUGHT IRON.
19528 VENTURA BLVD # 243, TARZANA, CA 91356.

51 UNITS APARTMENT

3063 W.PICO BLVD LOS ANGELES, CA 90006

APPROVED BY: N/A

DRAWN BY: SL

CHECKED: ADRIAN

SCALE: 3" = 1'-0"

DATE: 05.14.2021

JOB# : 15-010

SHEET TITLE: PLATE DETAIL

SHEET: P12

hs1 - (64)REQ'D
W/1/4"Ø HEAD STUD

ISSUES DATE:

PREPARED BY:

AZI STEEL, INC
STRUCTURAL STEEL WROUGHT IRON.
19528 VENTURA BLVD # 243, TARZANA, CA 91356.

51 UNITS APARTMENT

3063 W.PICO BLVD LOS ANGELES, CA 90006

APPROVED BY: N/A

DRAWN BY: SL

CHECKED: ADRIAN

SCALE: 3" = 1'-0"

DATE: 05.14.2021

JOB# : 15-010

SHEET TITLE: HEAD STUD BOLT DETAIL

SHEET: HS1

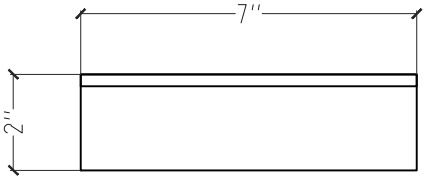

L01 - (25)REQ'D
L2x2x1/4"

ISSUES DATE:

PREPARED BY:

AZI STEEL, INC
STRUCTURAL STEEL WROUGHT IRON.
19528 VENTURA BLVD # 243, TARZANA, CA 91356.

51 UNITS APARTMENT
3063 W.PICO BLVD LOS ANGELES, CA 90006

APPROVED BY: N/A
DRAWN BY: SL
CHECKED: ADRIAN
SCALE: 3" = 1'-0"
DATE: 05.14.2021
JOB# : 15-010
SHEET TITLE: PLATE DETAIL
SHEET: L01

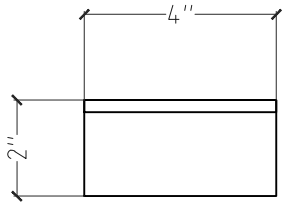

L02 - (2)REQ'D
L2x2x1/4"

ISSUES DATE:

PREPARED BY:

AZI STEEL, INC
STRUCTURAL STEEL WROUGHT IRON.
19528 VENTURA BLVD # 243, TARZANA, CA 91356.

51 UNITS APARTMENT
3063 W.PICO BLVD LOS ANGELES, CA 90006

APPROVED BY: N/A

DRAWN BY: SL

CHECKED: ADRIAN

SCALE: 3" = 1'-0"

DATE: 05.14.2021

JOB# : 15-010

SHEET TITLE: PLATE DETAIL

SHEET: L02

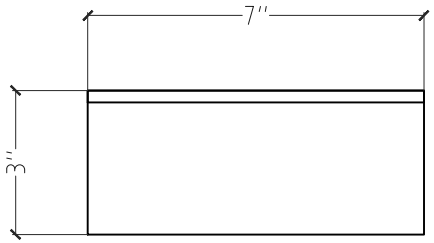

L03 - (6)REQ'D
L3x3x1/4"

ISSUES DATE:

PREPARED BY:

AZI STEEL, INC
STRUCTURAL STEEL WROUGHT IRON.
19528 VENTURA BLVD # 243, TARZANA, CA 91356.

51 UNITS APARTMENT
3063 W.PICO BLVD LOS ANGELES, CA 90006

APPROVED BY: N/A
DRAWN BY: SL
CHECKED: ADRIAN
SCALE: 3" = 1'-0"
DATE: 05.14.2021
JOB# : 15-010
SHEET TITLE: PLATE DETAIL
SHEET: L03

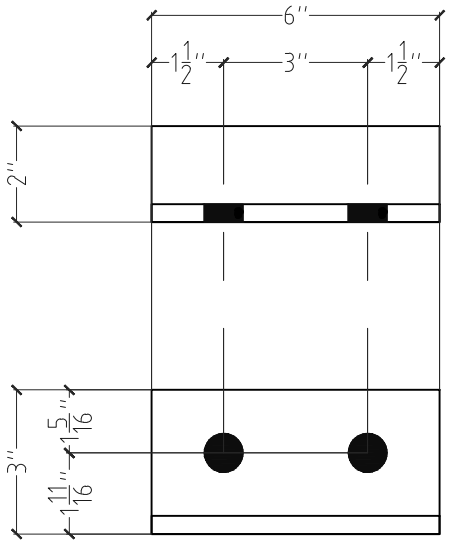

L04 - (2)REQ'D
L3x2x3/8"
w/(2)13/16"Ø HOLES.

ISSUES DATE:

PREPARED BY:

AZI STEEL, INC
STRUCTURAL STEEL WROUGHT IRON.
19528 VENTURA BLVD # 243, TARZANA, CA 91356.

51 UNITS APARTMENT
3063 W.PICO BLVD LOS ANGELES, CA 90006

APPROVED BY: N/A
DRAWN BY: SL
CHECKED: ADRIAN
SCALE: 3" = 1'-0"
DATE: 05.14.2021
JOB# : 15-010
SHEET TITLE: PLATE DETAIL
SHEET: L04